aquatherm INDUSTRIES, INC.

LIVE GREEN. SWIM WARM.

• SAVE INSTALLATION TIME AND AVOID CALL-BACKS •
• READ THIS MANUAL BEFORE MOUNTING COLLECTORS •

SWIMMING POOL SOLAR HEATING SYSTEMS INSTALLATION MANUAL FOR AQUATHERM INDUSTRIES' SUNLITE™ & ECOLITE™ SOLAR COLLECTORS

FOR MODEL NUMBERS:

17039-12 17039-10 17039-08
17043-12 17043-10 17043-08

MANUAL CONTENTS

This manual provides a detailed step-by-step procedure for the installation of an Aquatherm Industries' Sunlite™ or Ecolite™ Solar Pool Heating System. If the directions are followed correctly and only recommended Aquatherm Industries hardware and components are used, the installed system should provide years of trouble free service, savings, and enjoyment.

First, you should thoroughly plan the proposed system before installation. **Section One** of this manual explains and illustrates the required kits and components. **Section Two** provides detailed instructions for mounting the collectors and related hardware. **Section Three** concludes this manual with instructions for system start-up, check-out and maintenance.

CAUTION: *SOLAR COLLECTORS ARE OFTEN INSTALLED ON THE ROOFS OF BUILDINGS. UNLESS YOU ARE VERY FAMILIAR WITH WORKING ON ROOFS AND HAVE THE PROPER LADDERS AND SAFETY EQUIPMENT FOR SUCH WORK, YOU SHOULD HIRE SOMEONE WITH THE NECESSARY EXPERIENCE TO DO THE INSTALLATION. FAILURE TO OBSERVE SAFE PRACTICES ON A ROOF OR OTHER ELEVATED STRUCTURE MAY RESULT IN FALLING, LEADING TO SERIOUS INJURY TO YOU.*

SECTION ONE: KITS AND COMPONENTS REQUIRED TO BUILD A COMPLETE SYSTEM

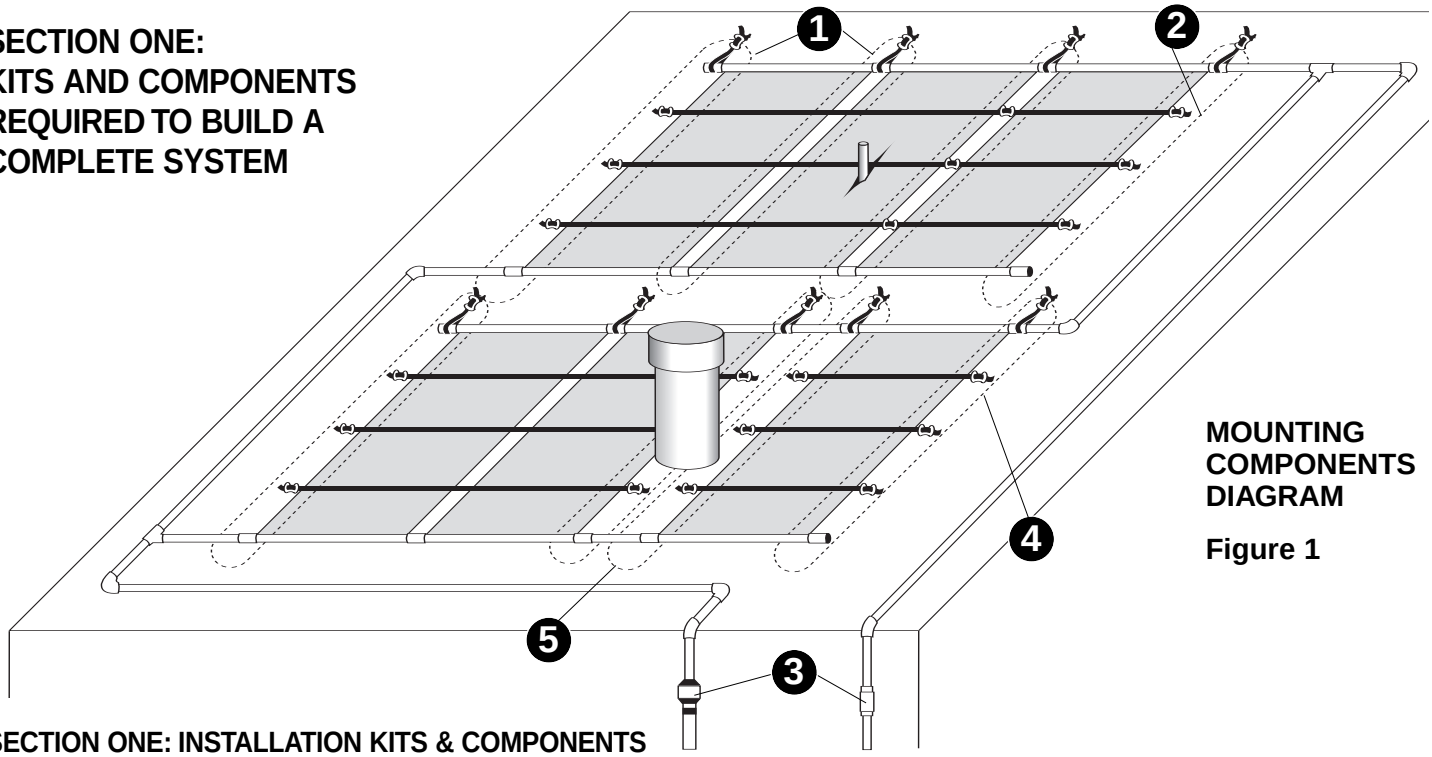

MOUNTING COMPONENTS DIAGRAM

Figure 1

SECTION ONE: INSTALLATION KITS & COMPONENTS

This section provides descriptions and part numbers of Sunlite™ & Ecolite™ Installation Kits and components required for each solar pool heating system. The mounting location of each kit component is shown by the corresponding circled number in the 'Mounting Components' diagram, shown above.

(1) **The Double Collector Installation Kit** (Part 18047-1) Contains the parts needed to fasten two solar collectors to a supporting surface and to make water connections for two collectors by one another.

Use one (1) kit for every two collectors.

Qty	Part No.	Description
2	16007-5	Outlet Header Hold-Down Strap (30")
5	30168	Strap Hold-Down Bracket
4	60001-1	Collector Connector Hose (3 3/4")
8	60003-1	Hose Clamp
3	16007-6	Hold Down Strap (67")

(2) **The System Kit** (Part #18049-1; Sunlite / 18055-1; Ecolite) Contains additional hold-down hardware and connecting parts and adapters needed to complete water connections from the row of collectors to the system feed and return lines. The pipe adapters that connect the system piping to the collectors are 1 1/2" high temperature CPVC. Installation manual is also included.

Use one (1) kit per system.

Qty	Part No.	Description
1	10003-1	Vacuum Relief Valve
1	16007-5	Outlet Header Hold-Down Strap (30")
1	30061-1	End Cap
2	30089-1	Pipe Adapter
4	30168	Strap Hold-Down Bracket
2	60001-2	System Connector Hose (7")
4	60003-1	Hose Clamp
1	60019-2	Check Valve PVC 1 1/2" - 2"
1	19622-1	Installation Manual (not shown)

3 Optional Supplemental System Isolation Kit (Part #18003 not shown) Contains additional parts to permit manual isolation of the solar system from the pool or spa filtration system. Use one (1) kit per system.

Qty	Part No.	Description
1	60019-2	Check Valve, PVC 1 1/2” -2”
1	60053-2	Ball Valve, PVC 1 1/2” -2”

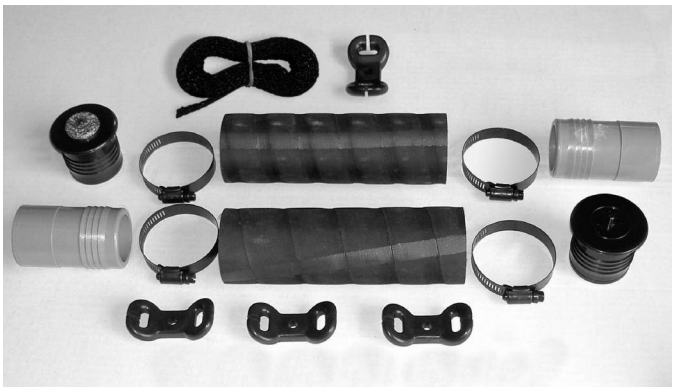

4 Add-A-Row Kit (Part #18005-1) Contains additional hold-down hardware and connecting parts and adapters needed to complete water connections of a row of collectors, for systems with more than one row. Use one (1) for each additional row after the first.

Qty	Part No.	Description
1	10003-1	Vacuum Relief Valve
1	16007-5	Outlet Header Hold-Down Strap (30”)
1	30061-1	End Cap
2	30089-1	Pipe Adapter
4	30168	Strap Hold-Down Bracket
2	60001-2	System Connector Hose (7”)
4	60003-1	Hose Clamp

5 Row Spacer Kit (Part #18004-1) Contains additional hold-down hardware and connecting parts and adapters needed if collectors must be separated by a space due to roof obstructions, such as a chimney or roof vent. Use one (1) for each gap between collectors.

Qty	Part No.	Description
4	30089-1	Pipe Adapter
1	16007-5	Outlet Header Hold-Down Strap (30”)
4	30168	Strap Hold-Down Bracket
2	60001-1	Collector Connector Hose (3 3/4”)
4	60003-1	Hose Clamp

SECTION TWO: INSTALLATION GUIDE

Step 1: Check Water Flow

Under normal conditions the existing filtration pump has adequate flow and head pressure to circulate the pool water through the system without significant reduction in flow. However, verifying the flow rates ensures satisfactory system operation.

In order to receive optimum results, the collectors should operate at or near nominal flow rates. Recommended nominal and minimum flow rates for the different collector sizes and maximum number of collectors per row are:

Collector Size: (feet)	2x12	2x10	2x8
Nominal flow rate per collector, GPM:	2.5	2.0	1.63
Minimum flow rate per collector, GPM:	1.5	1.25	1.0
Maximum number of collectors in 1 row:	20	24	28

For example: nominal flow through a row of 9 collectors, size 2 x 10ft is 9x2 GPM = 18 GPM

Compare your nominal flow with the flow rate of the pump. Consult the performance curves from the pump manufacturer if you are not sure. If the flow rate is excessive (more than 5 GPM per collector), or if the system pressure is greater than 30 PSI, a bypass line should be installed between the collector supply and return lines above the three-way valve.

If the flow rate is below the minimum as shown in the table above, then the size of the filtration pump or pipe size should be increased, or a booster pump installed in some cases.

Select appropriate pipe size for the system supply and return lines. The headers of the collectors are 1 1/2”, and the pipe adapters, included in the kits, connect to 1 1/2” PVC Schedule 40 pipe.

To avoid excessive pressure loses, the following minimum pipe sizes for the supply and return lines are recommended:

Maximum Flow GPM	Pipe Size: (inches)
40	1 1/2”
80	2”
100	2 1/2”
120	3”

Where the recommended size is not available, or where the length of the lines exceeds 100 feet, increase the pipe size.

Step 2: Decide on System Layout and Placement of Collectors

The basic considerations for the system layout is to ensure uniform flow across each collector, equal flow through every collector in the system and that the system drains automatically when not in operation. This is accomplished with connecting the supply line to the bottom (or inlet) header, and the return line at the opposite diagonal end. The outlet headers must be pitched a vertical distance of at least 8” above the inlet headers to assure proper drainage and performance (4^0 angle from horizontal).

DIVIDED SYSTEM ASSEMBLY ON ROOF

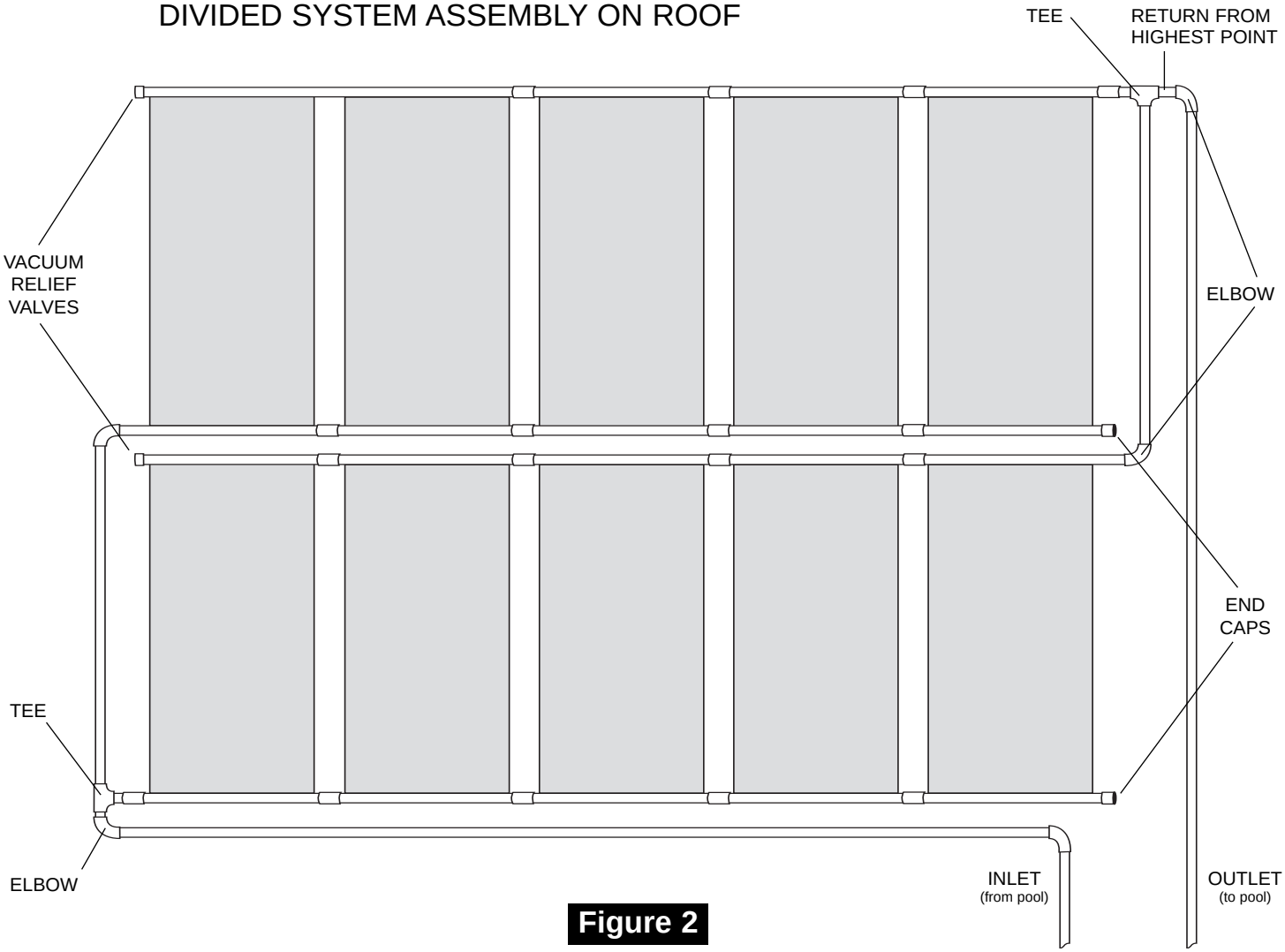

Figure 2

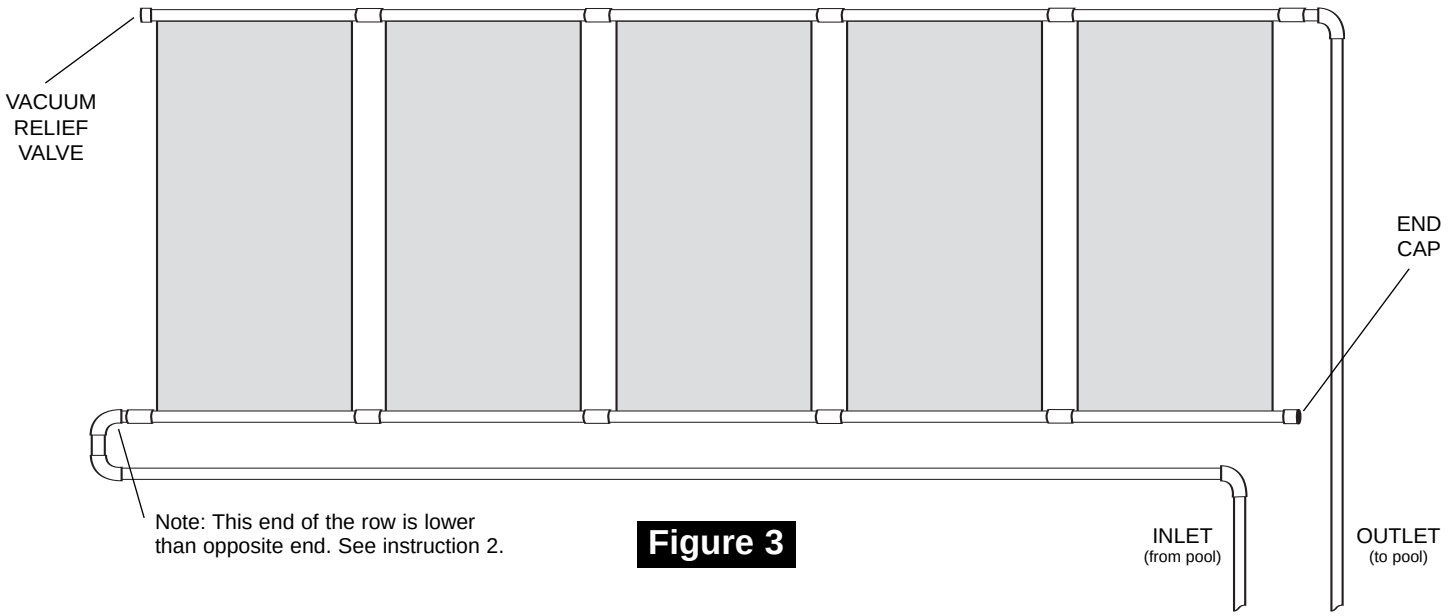

Figure 3

Most small to medium size pools require, and most roof configurations permit a solar heating system with only one row of collectors. Refer to Figure 3 for a typical one-row layout.

Use a divided system when installing more than the recommended maximum number of collectors per row, when avoiding roof obstructions, or where limited space dictates. This provides uniform distribution of water through all the collectors. If water distribution through the collectors is non-uniform, the heating capacity of the system will be reduced.

In systems consisting of more than one row of collectors, each row must be connected in parallel, and the “reverse return” outlet (return line) of the lowest row to the outlet of the top most row, (the highest and/or farthest point of the system). A divided system requires one Add-A-Row Kit, Part No 18005-1 for each row of collectors after the first. Refer to Figure 2.

A more complex divided system is shown in Figure 4. This also illustrates the application of the Row Spacer Kit, Part No 18004-1 to clear a roof obstruction.

Note: To assure equal flow, each row should consist of the same number of collectors. If particular roof configurations dictate rows with different numbers of collectors, it may be necessary to provide balancing and provisions to install a flow meter or temperature gauges should be made at the same time. For more complex systems, and/or systems where supply and/or return lines of each row has several elbows, it is recommended to install balancing valves and flow meters or temperature gauges for every row.

Figure 4

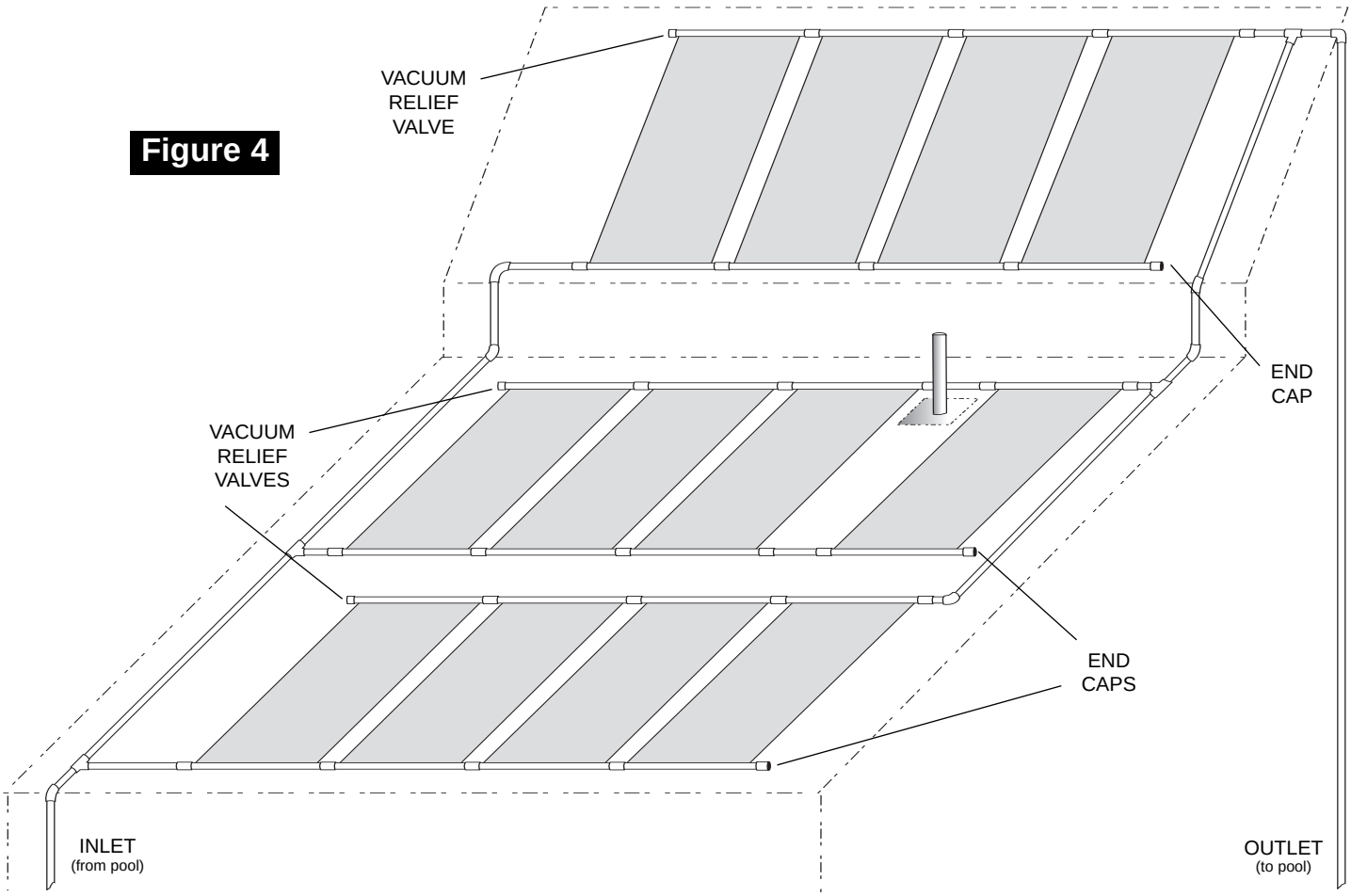

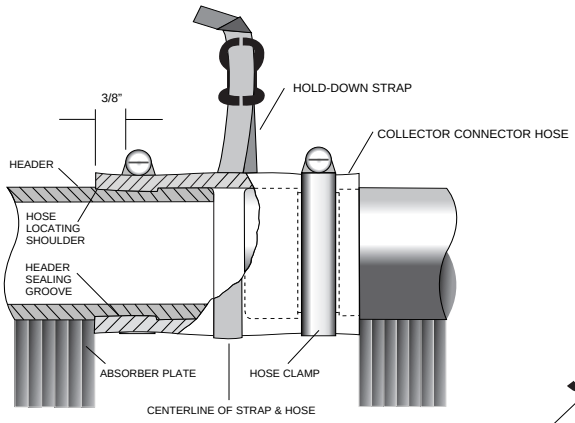

Figure 5a

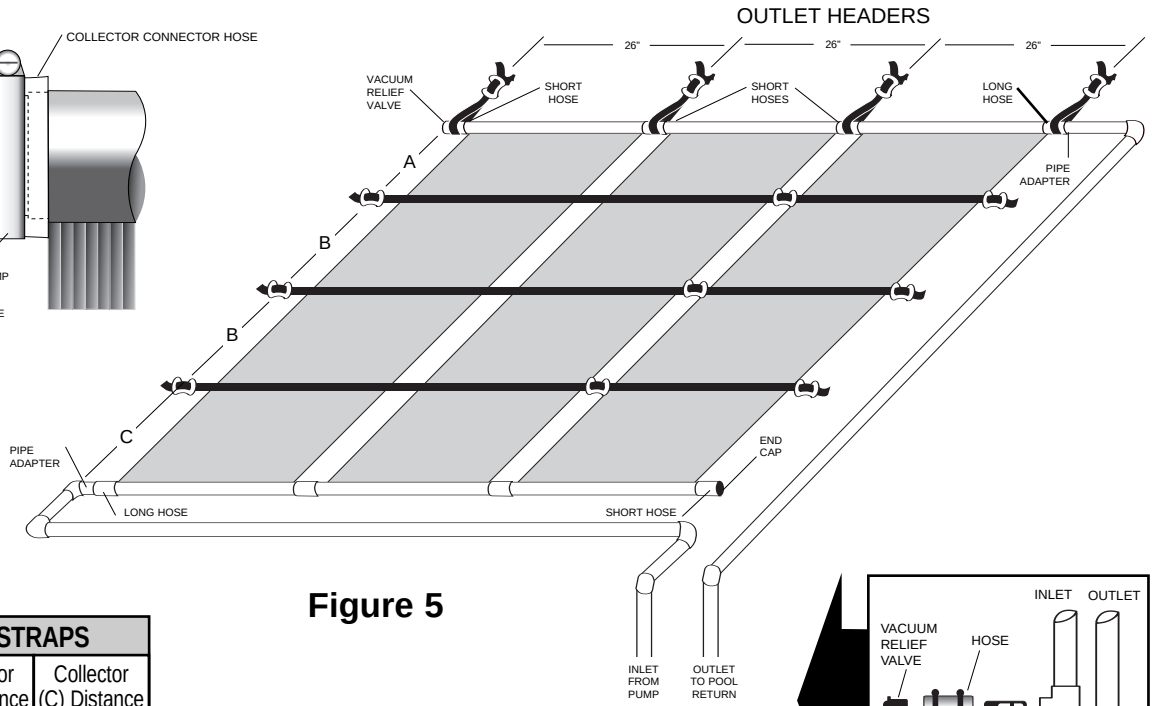

Figure 5

DISTANCE BETWEEN STRAPS			
Collector Panel Size feet	Collector (A) Distance inches	Collector (B) Distance inches	Collector (C) Distance inches
12	**44**	**48**	**8**
10	**36**	**40**	**8**
8	**32**	**30**	**8**

ASSEMBLY ON ROOF DIAGRAM

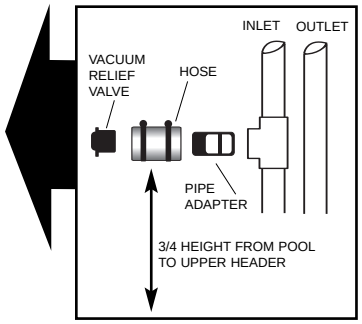

ALTERNATE VACUUM RELIEF VALVE LOCATION

Step 3: Install the Collectors

Refer to Figure 5 throughout this section.

Plan the collector location to allow at least one foot on all sides of the row(s) of collectors for mounting brackets and piping.

Roof obstructions, if present, should now be taken into account to determine the exact collector location.

Collectors can be installed over or around different diameter roof vent pipes or other obstructions. After snapping the top chalk lines but before marking and pre-drilling for your outlet header brackets, refer to the following instructions:

With a roof vent pipe or small obstruction, the collectors can be positioned on either side of the vent pipe. Two 7 inch long hoses (Part #60001-2) can be employed to couple the collectors together for vent pipes or other obstacles up to 7 inches in diameter. Mark your 26 inches centers wherever the outlet header brackets "fall" on the upper chalk line. With obstructions of over 7 inches, lay out the collectors on either side of the obstruction using a Row Spacer Kit, Part No 18004-1.

Figure 6

1. Determine the position of the last outlet header hold-down bracket for the row of collectors. Mark this point on the roof. The collector outlet header will be located approximately 5 inches below this mark. Refer to Figure 6.

2. Using this point, snap a chalkline to the opposite end of the row. This line should slope down the roof toward the inlet approximately 1 inch for each twelve (12) collectors in the row.

Drill a hole for the first outlet header bracket on the first roof mark. Use a 1/8” drill for 1/4” diameter screws. Measure 26” further along the chalk line, mark and drill a second hole. Then continue drilling pilot holes all along the chalk-line for the total number of collectors which you are using for the job.

Figure 7

3. Inject a generous amount of silicone or equivalent high quality sealer into each hole and onto the surrounding roof surface. Bolt all the outlet header hold-down brackets to the roof as shown in Figure 7.

4. Locate the strap hold-down bracket holes using the information in the table of Figure 5.

For example, for 10 foot collectors, the top strap is 32 inches below the outlet header, or 32+5 = 37 inches below the chalkline of the outlet header hold-down bracket. The center strap is 36 inches below the top strap, and the bottom strap is again 36 inches below the center straps or 16 inches above the inlet header.

Snap chalkline parallel to the outlet header hold-down bracket line. Do not install the hold-down brackets until the collectors are in place.

5. Bring the first collector to the roof and slip the proper hoses over both ends of the inlet and outlet headers on the last return collector. The long hoses go on the outlet of the last collector and the inlet of the first collector. Push UP TO the hose locating shoulder. Locate a hose clamp 3/8” from the end of the hose in order to center it on the header groves. This clamp must face up so as to be accessible for tightening and will not rub against the mounting surface. Make sure you securely tighten each clamp with a nutdriver. If a nutdriver is not available, a “hex” wrench or screwdriver will suffice. THE HOSE CLAMPS MUST BE LOCATED OVER THE GROVES IN THE HEADER. Refer also to Figure 5a.

Figure 8

6. Position the collectors on the roof so that the center of the outlet header connection hoses are beneath the secured outlet header hold-down bracket. Using the 30 inches length of strap provided with each kit, loop the strap around the connection hose, pull both strap ends through the slots of the bracket and secure the strap in the bracket by tying the loose ends into a knot as shown in Figure 8.

Continue to install all collectors in the row, coupling them side by side, referring again to Figures 4 and 8.

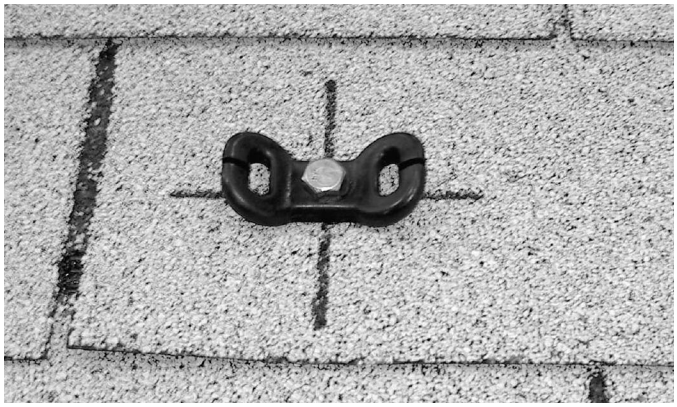

Figure 9

7. Proceed to the lower chalklines previously snapped on the roof for the strap hold-down brackets. Mark a hole 2” to the side of the first panel and continue marking holes on the chalkline centered exactly between the absorber surfaces until you reach the last collector. Mark the last hole the same 2” to the side of the last panel. Drill a pilot hole and apply roof sealant at each of these locations. Bolt the strap hold-down brackets on the roof. Refer to Figure 9. It is OK to step on the collectors.

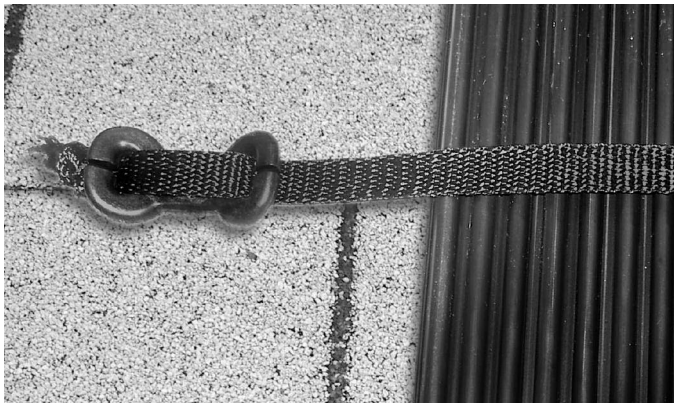

Figure 10

8. Slip one end of a hold-down strap through the slots in the strap hold-down bracket at the end of the row. Pull about 9” of the strap through and slip the loose end of the strap through the slot closer to the collector and pull it tight and tie a double knot. Refer to Figure 10.

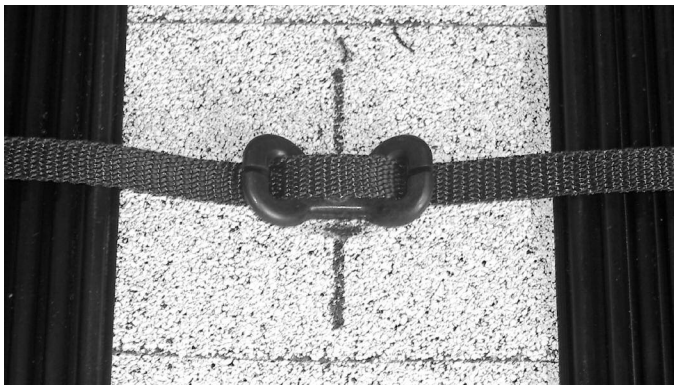

Figure 11

9. Bring the remaining strap end across the panel face passing through both slots in the bracket located on the other side of the panels. Pull the straps taut against the face of the panel. Repeat this procedure for the remaining hold-down strap. Refer to Figure 11.

10. Secure opposite end of strap as shown in Figure 10.

Repeat this procedure for each strap.

11. Install the Vacuum Relief Valve in the outlet header of each row. This will be located at the opposite end of the row that is connected to the collector outlet pipe. Refer to Figures 4 and 12.

12. Install an End Cap in the inlet header of each row, opposite the end that is connected to the collector inlet pipe. Refer to Figures 4 through 12.

13. **INSPECT THE INSTALLATION AND CHECK ALL CLAMPS FOR PROPER POSITION AND TIGHTNESS.**

14. **FOR HURRICANE OR HIGH WIND AREAS, USE HURRICANE PANEL HOLD-DOWN KIT, part No. 18006. CONTACT FACTORY FOR INSTALLATION INSTRUCTIONS.**

Step 4: Piping and System Types

Refer to the “System Diagram” Figure 12, throughout this section. The most common piping configurations use a pressure filter. The pump draws the water from the skimmer and/or a main drain, forcing it through the filter and sending it back to the pool through the return lines.

If a fuel-fired heater is installed, it is located between the filter and the return line to the pool. The pipes to and from the solar collectors are connected to the return line to the pool *before* the water enters the fuel-fired heater, if one is used.

Whenever there is more than 40 GPM required flow rate to the collectors or more than 100 feet of piping used in a system, install larger piping to and from the panels. Piping to and from the collectors should be the same type of plastic piping and fittings approved for use with swimming pool filters and pumps. It is recommended to always use Schedule 40 PVC pipes and fittings.

Although PVC pipe is generally white, black is also available but may be difficult to find locally. If for aesthetics black pipe is desired, it can always be painted black. Before painting, the PVC pipe must be wiped with cleaner to remove the glossy surface coating. This will ensure that the paint will not flake off prematurely.

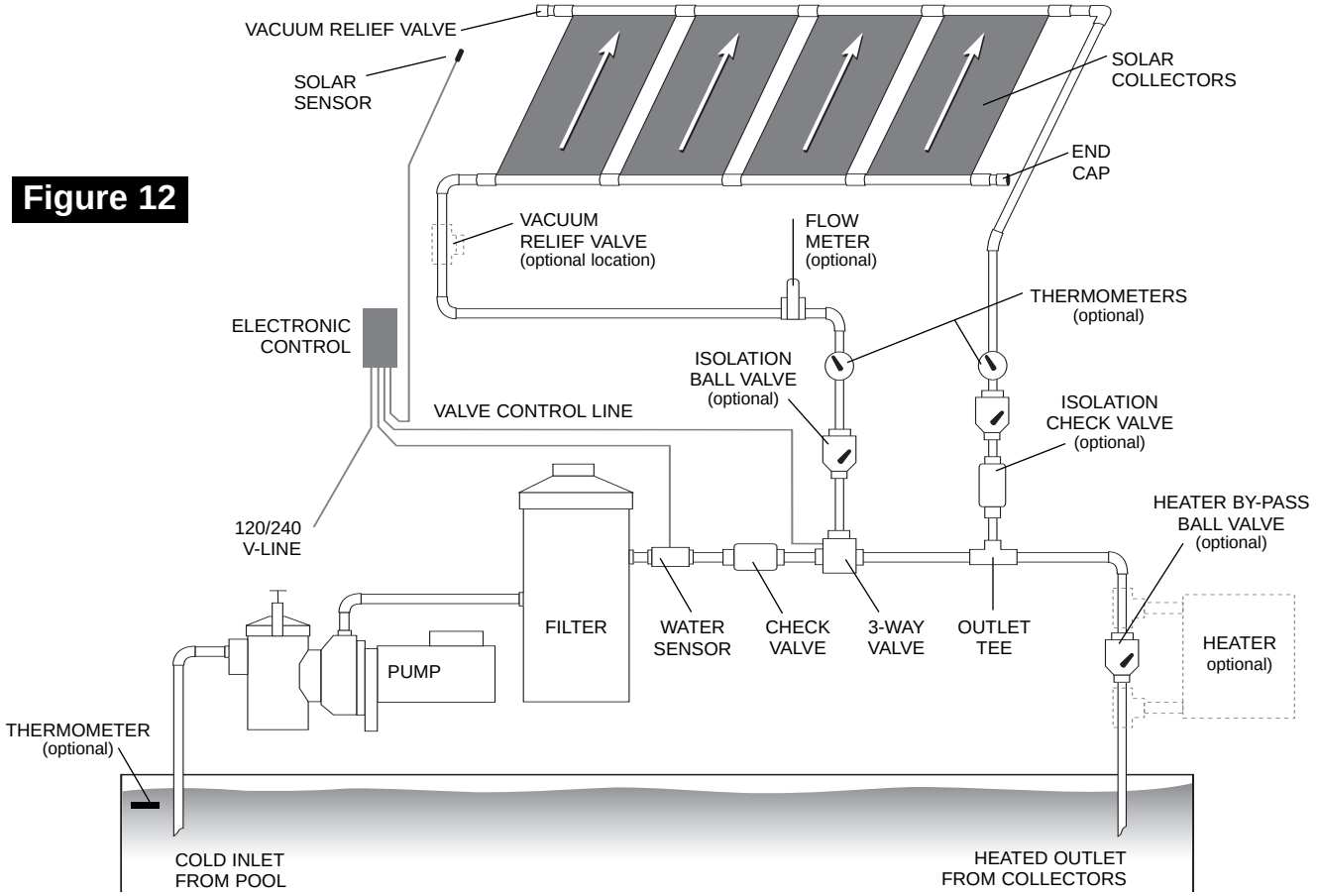

Figure 12

Use a PVC pipe cutter or a PVC wide-blade saw (not a hacksaw) for cutting pipe. It is important to use both quality cleaner/primer and solvent in gluing a PVC joint. Finally, use a cloth while either gluing or painting to keep the job a clean one.

Piping should be supported at intervals of 5' for horizontal pipe and 8' for vertical pipe. Use either galvanized or plastic clamps. Aquatherm Industries hold-down brackets, Part No. 30168 with strap Part No. 16007-5 used as shown in Figure 8 (outlet header hold-down configuration) are also excellent pipe hangers.

The above diagram shows an automatic electronic temperature control system with a motorized three-way valve

Piping a manually controlled system is identical, except a manual three-way valve is in place of the motorized valve.

Observations to some individual components:

Vacuum Relief Valve, Part No. 10003-1

One per row of collectors. It is usually installed at the top end of the header opposite the header connected to the return line. However, in installations where the head pressure of the filtration pump may be marginal, the Vacuum Relief Valve might occasionally allow air to enter the system during operation. To prevent this, it is recommended to install the Vacuum Relief Valve at the alternate location. Best suited is the vertical supply line, at a point about 3/4 high from pool to top-most row of collectors. See Figure 5 for location and installation method.

Optional Isolation Valves

Isolation valves may be installed in the solar system piping so that the pool may be operated while the collectors are being serviced or during freezing weather. Install a manually operated ball valve in the solar system inlet line and a check valve on the solar system return line. Both valves, available in the Optional Supplemental System Isolation Kit, Part No 18003, are made to accept either 1 1/2" or 2" PVC pipe fittings. Make sure that the arrow on the check valve is pointing away from the collectors, and that the ball valve and check valve are located as close to the control valve and outlet "T", respectively. To make sure no water is left in the collectors for servicing or during freezes, remember that the pool pump should be shut off allowing the collectors to drain naturally before the optional isolation valves are closed.

Manual Systems

A manually controlled system generally uses a non-positively sealed threeway valve. Water flows continuously through the solar collectors when the filter pump is on, but can be diverted manually by the system owner if the pool becomes too warm or during extended cloudy weather. During a threat of freezing conditions it can also be diverted, by first shutting off the pool pump, allowing the collectors to drain, diverting the three-way manual valve to the "bypass collector" position and shutting the

isolation valves on the collector feed and return lines. A lower end cap on the collectors or any of the connecting hoses can be removed to make sure there is no standing water in the panels. The filter pump can then be re-started to allow for normal pool filtration.

During normal operation of the system when the three-way valve is in the "bypass collector" position all the water in the panels would drain back through the three-way valve (non-positively sealed) when the filter pump shuts off. An alternate way to protect against sudden freezes can be accomplished by running a small bypass line (1/8”-1/4”) between the collector feed and return line above the isolation valves. It is possible that a small amount of water may be present in the collectors when a non-positively sealed three-way valve is used and the filter pump is on. If a positively sealed three-way valve is used, a bypass line as mentioned above is mandatory to allow for panel drainage.

Automatic Control Systems
The performance of a solar pool heating system can be improved with the use of an electronic control and motorized three-way valve. The control activates the motorized valve and either sends water through collectors for heating (or nocturnal cooling) or automatically bypasses the collectors when the pool is warm enough or insufficient sunlight is available. **Refer to the manufacturer's instructions included with the automatic equipment you use.**

Other Equipment
Some pools employ an automatic pool cleaner. This should be plumbed before the control valve to assure positive flow to the cleaner at all times. If the pool uses an automatic chlorinator, this should be plumbed after the outlet tee on the return to the pool.

Supplemental Gas, Oil-Fired, or Electric Heaters
It is desirable to pipe the stand-by heater in a bypass loop. Refer to the System Diagram Figure 12. Fuel-fired heaters often create a large pressure drop. By placing the heater in a by-pass loop, pump size, and electrical energy requirements may be reduced.

SECTION 3: SYSTEM START-UP, CHECK-OUT, AND MAINTENANCE

System Start-up and Check-out for Automatic Systems
To check out the system for proper operation turn on the filter system. Set the temperature control to its highest level. Switch the control to the "flow through collector" mode. The "flow through collector" light should come on. The three-way valve will then be sending water thru the collectors, and air will be purged out of the collectors into the pool return line for several minutes, and should then clear. The panels should feel uniformly cool to the touch. Switch the control to the "bypass collector" mode. The corresponding light will go on and the three-way valve will be sending water directly back to the pool, bypassing the solar panels. After about 5-10, minutes, feel the solar panels again. They should have begun to warm up. Now switch back to the automatic mode. If the sun is still shining on the solar collectors, the "flow through collector" light should come on again. Slide the temperature control downwards, and when you reach the actual temperature of the pool water, the light will turn off. The flow bypass collector light will go on again. Slide the temperature control to maximum. The flow through collector light will go back on. For more detailed information on the system startup, trouble shooting and valve/control installation, follow the manufacturers' instructions included with the automatic control system.

Manually Controlled Systems
Test system operation with setting the manual three-way valve for water flow through the collectors. Turn on the pump and observe air from the collectors and piping being purged into the pool for the first few minutes of operation. The collectors should now be cool to the touch.

Flow Rate Test and Adjustment
With the system running and the sun shining, all collectors of the system should be uniformly cool to the touch, and the system will be operating at optimum performance. If the system has been installed according to these instructions, and the collectors connected for diagonal flow with the reverse return principle, this optimum performance condition will now exist.

Systems with rows of collectors of unequal size, but fitted with balancing valves, may now be adjusted. Open all balancing valves completely and let the system run for several minutes. The row(s) which feel(s) warmer to the touch than the other(s), is currently receiving less flow then it should for optimum performance. Throttle the valve(s) of the other (cooler) row(s) step-by-step, each time waiting for a few minutes, and check the temperature. Once all rows feel uniformly cool, the system is balanced and operates at optimum performance. Should unexpected problems be encountered, the flow rate must be checked out more thoroughly. There are two methods:

Temperature Rise Test Methods
An alternate test method is temperature rise. To prepare the system for testing, obtain two accurate thermometers. One of these thermometers is installed in the outlet line from the collectors as shown in the System Diagram Figure 12. The other is used to check the temperature of the pool water, to compare it with that of the water leaving the solar collectors. Before installing the thermometer in the outlet line, immerse both thermometer probes in the pool water for several minutes to compare the temperature readings. If they are not identical, make a notation of the difference and add or subtract (as appropriate) this difference to or from the reading taken while your are testing. This is necessary in order to provide an accurate

indication of the temperature rise of the water passing through the solar panels.

Turn the pump on and move the flow switch to the "COLL" position. Observe valve action... it should divert water through the collectors. After flow through the collectors has continued for at least fifteen minutes, compare the pool water temperature with the temperature of the water flowing through the outlet line. On an average sunny day, with the air temperature approximately 70° F the water leaving the panels should be 1 to 7° F higher than that in the pool. If the water rise is **greater** than this, insufficient water is flowing through the panels. This may be caused by a clogged filter, undersized piping, too many elbows in the piping or an inadequate pump. **It is important that the temperature rise through the collectors be kept as low as possible in order to deliver the maximum amount of heat to the pool.**

Vacuum Relief Valve Test

When the solar system is first turned on, air in the panels will be expelled into the pool and bubbles will appear. The appearance of bubbles in the pool should stop after a few minutes.

If, after a few minutes, bubbles continue to be discharged at the return to the pool, remove the vacuum relief valve(s) and replace it with an end cap. Relocate the vacuum relief valve to a position in the inlet piping which is at a height approximately three-fourths of the elevation of the collectors, above the pool. Refer to Figure 5.

A quicker alternate method is to first try to reverse the end cap and the vacuum relief valve on the collector array to see if this stops the bubbles in the return lines. If the flow or pump pressure are marginal, the long hoses on the inlet and outlet piping may collapse. If this condition exists, slip a 2” long piece of 1 1/2” pipe into the center of the hose to prevent this.

Booster Pump Systems

In some cases, the pool filter pump may not be able to circulate water at a high enough flow rate to allow for proper panel operation. If so, it may be necessary to replace the filter pump with a larger one or add a booster pump. If the pump size is increased, it may also be necessary to upgrade the filter with one with greater flow ratings.

MAINTENANCE

Winterizing Procedures

The solar collectors should drain automatically each time the pump cycles off. There are no special requirements for winterizing the solar collectors. The pool piping should be winterized as per your normal practice.

In some parts of the world, pool owners operate their pools throughout the winter, although light freezing conditions may occur. The accepted procedure to avoid freezing of the pool piping and filtration system is to continuously circulate the water.

When solar heaters are used on a pool under these conditions, anti-freeze precautions should be taken. Aquatherm collectors are not normally affected by light freezing. **However, in order to protect appurtenant components such as end caps and pipe fittings and the collectors against unusual or severe freezing condition, one of the following two procedures should be followed. When freezing weather is imminent:**

1. Turn circulating system off and allow solar panels and piping to drain. Isolate collectors with gate or ball valve in panel feed line and a check valve in the panel return line. Switch the solar control panel to the bypass position. The pool filtering system may then be turned back on. When freezing conditions have passed, open isolation valves and switch the solar control panel to "AUTO".

2. If isolation valves are not installed in the system, switch the solar control panel to the "COLL" position so that water circulates through the collectors. When freezing conditions have passed, switch the solar control panel to "AUTO". THIS METHOD IS NOT RECOMMENDED WHERE TEMPERATURE LEVELS MAY DROP SEVERELY.

Annual Service

Hose Clamps:

In particularly hot climates, such as Arizona and Southern Florida, the clamps which are used to connect the solar collectors may become loose. If you notice leaks around the hose couplings, use a nutdriver to tighten clamps. Do not tighten to the extent that the pipe collapses or the clamp gears strip.

COLLECTOR REPAIR

In case of a leak in the collector, there is an easy and permanent on-site repair method that will not void the warranty:

Locate the leak and with a sharp utility knife cut through the tube at the leak. Cut the web lengthwise on each side of the tube about an inch above and below the leak area, enough so that either section of the tube may be pushed downward.

Insert repair plugs, Part No. 30141 in the tube openings, one above and one below the leak area. Use a .050 Allen screwdriver to insert the plug into place. Bring the damaged section of the tube back to its former position, restoring the original appearance of the collector.

If the system is in an area experiencing frost, locate the plugs near the headers to avoid water being trapped inside the tube and freezing.

Figure 13

BOOSTER PUMP SYSTEM DIAGRAM FOR OUTDOOR POOLS

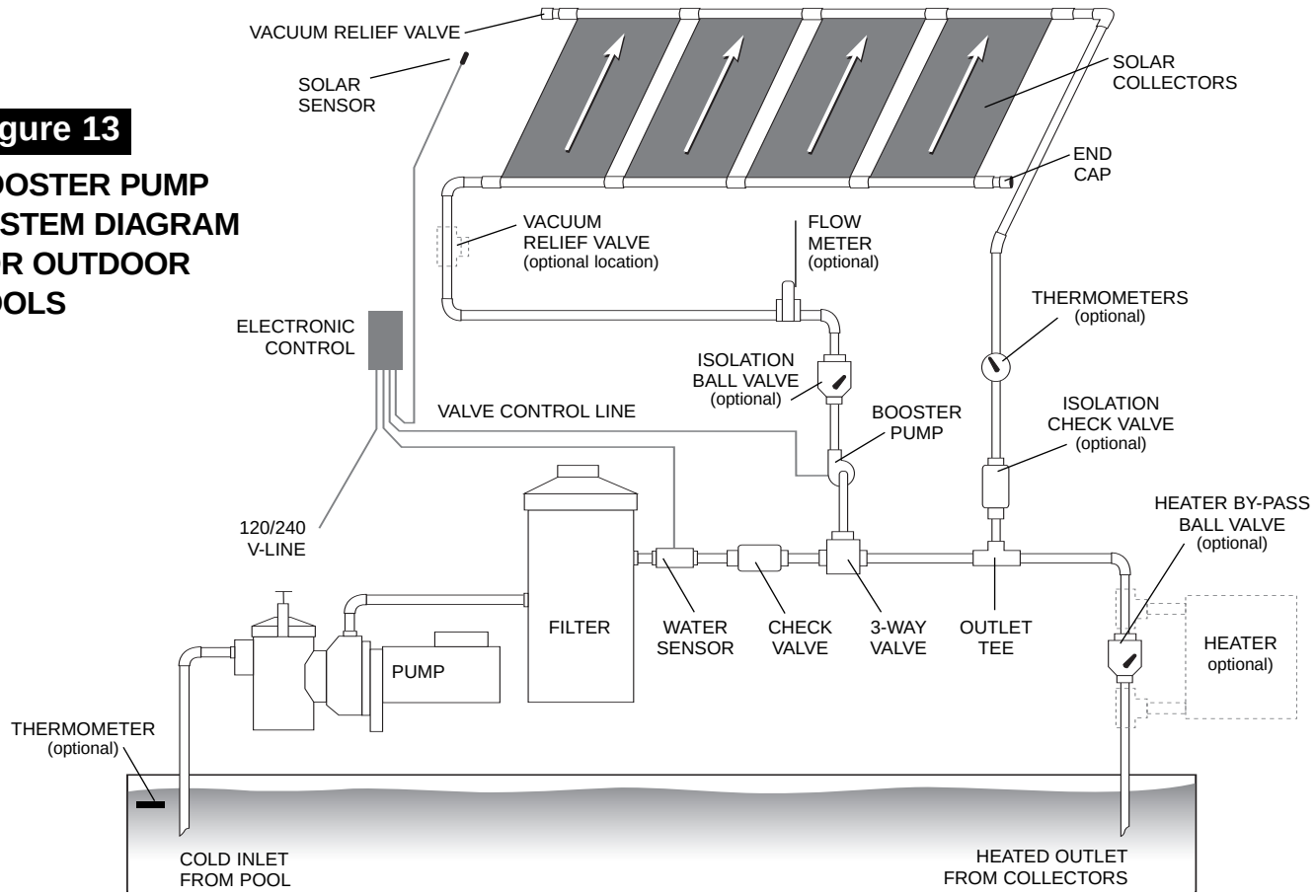

aquatherm INDUSTRIES, INC.
LIVE GREEN. SWIM WARM.

1940 Rutgers University Blvd.
Lakewood, New Jersey, USA 08701
1-732-905-9002
e-mail: aquatherm@aol.com